ISSN 2395-1621

Real- Time Implementation of Hydroelectric Power Plant Using PLC and SCADA

Andure Sushil Satish, Balapure Akshay Ashok, Rangwal Rajan Atmaram, Taur Ram Ganesh

sushilandure1900@gmail.com
rajanrangwal138@gmail.com
akshaybalapure18@gmail.com
ramtaur604@gmail.com

Electronics Engineering, SPPU
Pune, India.

ABSTRACT

This project emphasize on controlling the process variable parameters such as level and flow with real time implementation of gate control of hydroelectric power plant using Programmable Logic Controller. In this work, a programmable logic controller is used as an industrial computer playing the role of a control device and push buttons, level and flow sensors provide incoming signals to the control unit. This project contains with five levels in the upper tank and two levels in the lower tank and depending on the level sensor outputs the ladder logic is actuated.

ARTICLE INFO

Article History

Received:25th December 2020

Received in revised form :

25th December 2020

Accepted:30th December 2020

Published online :

2nd January 2021

I. INTRODUCTION

The increasing demand of energy has forced us to look at the other options different from conventional means of exploiting energy as conventional sources of energy are exhaustible. The capacity to produce this energy is dependent on both the available flow and height from which it falls. To meet the various disadvantages of conventional type such as Ecosystem damage, siltation, flow shortage, methane emissions etc., automation can be used. Before the existence of automation, qualified personnel operated the equipment manually called as the manual system where the automatic system reads the information on the equipment status operation and then activates commands or controls to optimize the output production. Therefore the need for automation for a small hydroelectric power plant is to improve the efficiency, productivity and the operating management of the system which solves the problem of production needs.

II. LITERATUTE SURVEY

2.1 Literature review

2.1.1 Design Projects in a Programmable Logic Controller (PLC) Course in Electrical Engineering Technology

A Programmable Logic Controller (PLC) is a specialized computer used for the control and operation of manufacturing process and machinery. A junior/senior level PLC course in a four-year electrical engineering technology institution mainly covers the following topics: PLC hardware components, developing fundamental PLC wiring diagrams, basics of PLC programming, timers, counters, program control instructions, data manipulation instructions, math instructions, sequencer and shift register instructions, PLC installation, editing and troubleshooting. After the lectures, students practice PLC programming using RSLogix from Rockwell Automation. Students are able to observe the operation of the program and make necessary modifications as necessary. Towards the end of the semester, students have learned the basic PLC programming instructions. It is a good time to enhance their practical problem solving abilities by working on an extensive design project using PLCs. This paper discusses three separate design projects aided with PLCs to solve practical process and machinery problems in industrial environments.

Summary and Conclusions : The Programmable Logic Controllers (PLC) course is a 3 credit hours course for junior/senior level Electrical Engineering Technology students. Fundamentals of PLC hardware components,

programming and troubleshooting were covered in lectures first. Then students were expected to complete a PLC design project based on the topics covered in the course. The design project provides students an opportunity to apply knowledge acquired in the lecture to real engineering problems14. Cases of student PLC design projects are discussed in this paper. Examples include control of filling a tank, hybrid boat control and control of a movable conveyor for a trailer. Students developed creativity, teamwork and practical problem solving skills. Assessment shows that students have very good response to the design projects. Communication skills of the students were enhanced from writing the final reports and giving the oral presentation in the class. 2 Real- Time Implementation of Hydroelectric Power Plant Using PLC and SCADA.

2.1.2 SCADA AND PLC VULNERABILITIES IN Although PLCs have been around for more than 40 years, until Stuxnet, few security research projects were focused on them. PLCs were originally developed in the 1960s to facilitate industrial automation. Many PLCs in use today utilize a simple programming language called Ladder Logic to make it easier to program them. Fortunately, or unfortunately—depending upon one's perspective—the simple and basic nature of PLCs makes them exceptionally vulnerable to being exploited. The ease with which programming PLCs can be done is one of the reasons why many in the computer security research community have now shifted their focus upon where and how PLCs are used. So far, the focus has primarily been on large SCADA systems and the use of PLCs in critical infrastructure such as in manufacturing plants, power grid, pipelines, water systems, and so forth. Our research analyzes PLC usage and vulnerabilities that has escaped attention because most people know very little about PLCs in correctional facilities.iii Understanding the electronic, physical and computer security designs in correctional facilities will outlines why PLCs were implemented in many jails and prisons and elucidates their requisite vulnerabilities.

Summary: A logical conclusion to this research is that the paper findings do not only pertain to PLC and SCADA vulnerabilities in correctional facilities, but in any high-security location that uses these technologies as well as in manufacturing plants, transportation and just about anywhere that multiplexing is used. When securing the country's most dangerous liabilities, the paper encourage that more attention be paid to access control, network security/segmentation and personnel policies. And as was the case with Stuxnet, proper adherence to secure operating procedures will greatly reduce the chances of infection of PLCs and control computers from the inside and outside of a secure facility.

2.1.3 SCADA applications in thermal power plants
This paper presents the applications of a supervisory control and data acquisition (SCADA) system in thermal power plants (TPPs). In fact, a supervisory system must take into account the physiological and cognitive features of the supervisory operator. The paper briefly discusses on the one hand the different steps of the application of a SCADA system and the difficulties to manage and on the other hand it presents three examples of the application of a SCADA system in a TPP in Tunisia and the instrumentations and the measurements used. The first application is related to a counting system of the natural gas, the second one is related to the supervision of pumps vibrations and the third one is related to the supervision of heavy fuel oil. Supervision consists of commanding a process and supervising its working. To achieve this goal, the supervisory system of a process must collect, supervise and record important sources of data linked to the process, to detect the possible loss of functions and alert the human operator (Baily and Wright, 2003). The main objective of a supervisory system is to give the means to the human operator to control and to command a highly automated process. So, the supervision of industrial processes includes a set of tasks aimed at controlling a process and supervising its AISSMS IOIT, Pune-01, BE Electronics, Academic Year 2019-20 Page 3 Real- Time Implementation of Hydroelectric Power Plant Using PLC and SCADA operation (Carke et al., 2003). Supervisory control and data acquisition systems (SCADA) are widely used in industry for supervisory control and data acquisition of industrial processes. The process can be industrial, infrastructure or facility. SCADA system is used to observe and supervise the shop floor equipments in various industrial automation applications. SCADA software, working on DOS and UNIX operating systems used in the 1980s, was an alarm-based program, which has a fairly simple visual interface (Warcuse et al., 1997) (Wiles, 2008). The SCADA system usually consists of the following subsystems (Ozdemir and Karacor, 2006): 1. A Man-Machine Interface (MMI) is the apparatus which presents process data to a human operator, and through this, the human operator, monitors and controls the process. 2. A supervisory system, acquiring data on the process and sending commands to the process. 3. Remote Terminal Units (RTUs) connecting to sensors in the process, converting sensor signals to digital data and sending digital data to the supervisory system. 4. Communication infrastructure connecting the supervisory system to the RTUs.

Conclusion:
The SCADA system is used for monitoring and controlling industrial processes from remote areas. It allows an operator to make a set point changes on remote controllers, to open/close valves/switches, to monitor alarms and to gather instrument information from a local process to a widely distributed process, such as oil/gas fields, pipeline systems, or hydroelectric generating systems. In the context of SCADA, it refers to the response of the control system to changes in the process and makes them similar to real-time control system in the virtual environment. In this paper, an example of a SCADA system in a TPP is studied and some applications are presented. First, we presented the supervision of a counting system of the natural gas of a TPP. This application was permitting the branching of counters of the natural gas to a SCADA system of the TPP in the one hand, and requires the programming and the configuration of the counting system, on the other hand. Second, we presented the supervision of a system of vibratory surveillance in a TPP. This application enables us the creating and the maintaining dynamics of updating the pumping process displays. Finally, we presented the supervision of heavy fuel-oil tanks of a TPP. This application allows us to assure the connection between the ultrasound sensor and the post of surveillance in the control

room of the TPP. However, the paper discusses the need to monitor the process and possibly control the operation of TPPs from virtually anywhere.

2.1.4 Role of SCADA in Hydro Power Plant AUTOMATION

Interoperation of various control system in power house and substation automation system from SCADA was a challenge in past decades, but with the development AISSMS IOIT, Pune-01, BE Electronics, Academic Year 2019-20 Page 4 Real- Time Implementation of Hydroelectric Power Plant Using PLC and SCADA of IEC 60870 - 5 - 103/104 and IEC 61850 interoperation of various automation systems is possible. IEC 60870 standard is used for telecontrol in electrical power system such systems are used for controlling electrical transmission grids, power house control system like turbine controller, Protection system, Excitation System and other geographically widespread control system. This paper describes a SCADA System for hydro power plant automation in compliance with the various IEC standard and interfacing protocols to ensure interoperability among the various devices.

III. BLOCK DIAGRAM

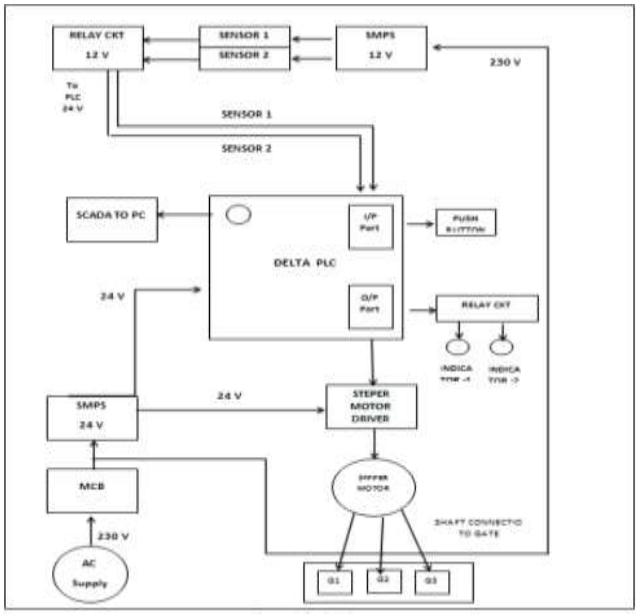

Real- The Implementation of Hydroelectric Power Plant Using PLC and SCADA

The heart of the process is PLC, where the input signals are given to the PLC. The input devices can be pushbutton, selector switches, level switches, limit switches, photoelectric sensor, motor stator contactors etc.

The heart of the process is PLC, where the input signals are given to the PLC. The input devices can be pushbutton, selector switches, level switches, limit switches, photoelectric sensor, motor stator contactors etc.

The output of the PLC is given to the final control element. The output elements can be valves, motor stator, solenoids, control relays, alarms, light, fans and horn.

The final control elements used in this work are the solenoids. They control the opening of the gates. Hence the process is controlled using the solenoid valves and the feedback signal which is the level of the gates (opened/ closed) is given to the input.

IV. CONCLUSION

In the proposed system it represents an automatic/ remote controlling of an hydroelectric power plant using PLC and SCADA. This prototype model of a hydroelectric power plant which is completely automated can control the level of the dam gates using backup of the water. Thus using PLC and SCADA the level of water in the dam is controlled effectively thereby opening the gates of the dam whenever the level deviates. Therefore the use of PLCs has opened doors for a level of automation of hydropower plants.

V. ACKNOWLEDGEMENT

It is my great pleasure in expressing sincere and deep gratitude towards my guide Prof. Dr. D. K. Shedge, Head of the Department of Electronics Department for his valuable guidance and constant support throughout this work. We take this opportunity to thank Head of the Department Dr. D. K. Shedge and Project coordinator Dr. Sanjay Kurkute and all staff members of department of Electronics Engineering AISSMS IOIT, Pune, for cooperation provided by them in many ways. The motivation factor for this work was the inspiration given by our honorable principal Dr. P. B. Mane. Lastly I am thankful to those who have directly or indirectly supported for our work.

REFRENCES

1. Liping Guo,'Design projects in a Programmable Logic Controller Course in electricalengineering', The Technology Interface Journal/ Fall 2009.

2. Teague newman SCADA and PLC vulnerabilities in correctional facilities.

3. M.N.Lakhoua,'SCADA Applications in thermal power plants', International Journal of the Physical Sciences, Vol 5(6), pp.1175-1182, June 2010.

4. Ruzhekov.G, Skvov.T, Puleva.T, 'Modeling and implementation of hydroturbine adaptive control Based on gain scheduling technique', International conference on Intelligent System Application to Power System, 25- 28th Sept 2011.

